IP65 | 4-20 mA 0-10 V | RS485 Modbus

CE

Oxygen Transmitter
E2618-O2

Features

- Wall-mount or duct-mount version
- Industrial IP65 housing
- Two analog outputs settable to 4-20 mA or 0-10 V
- RS485 Modbus RTU digital interface
- Attached or remote sensor

Specifications

Calibration	Oxygen O_2
Sensor type	2-year Electrochemical 3-year Electrochemical (order code O2-3Y) 5-year Electrochemical (order code O2-5Y)
Sampling method	Diffusion
Detection range	0...25% vol.
Resolution	0,01% vol.
Response time T90	<10 s
Signal update	Every 1 second
Sensor lifetime	> 2 years > 3 years (for O2-3Y) > 5 years (for O2-5Y)
Maintenance interval	6 months
Self-diagnostics	Full functionality check at start-up
Warm-up time	≤ 1 min ≤ 15 min (O2-5Y)
Power supply	12...36 VDC (default) 24 VAC as option
Power consumption	< 2 VA
Digital interface	RS485, Modbus RTU protocol
Analog outputs	2 × 4-20 mA / 0-10 V, user settable
Output scale width	Recommended: 20-100% of the range; > 10 × resolution in any case
Enclosure	Grey ABS plastic, wall mount, protection class IP65
Dimensions	H82 × W80 × D55 mm
Remote sensor probe	Protection IP65, shielded cable default cable length 3.0 m
Operating environment	Industrial indoor and outdoor locations
Operating conditions	15...90% RH; 5…95% RH (O2-3Y); Non-condensing; 0,9...1,1 atm; Explosion-safe areas; Non-aggressive atmosphere -30...+50 °C -40…+60 °C (for O2-5Y) **NOTE!** We offer technical solutions for extreme humidity, please ask for more information.

Wall mount version

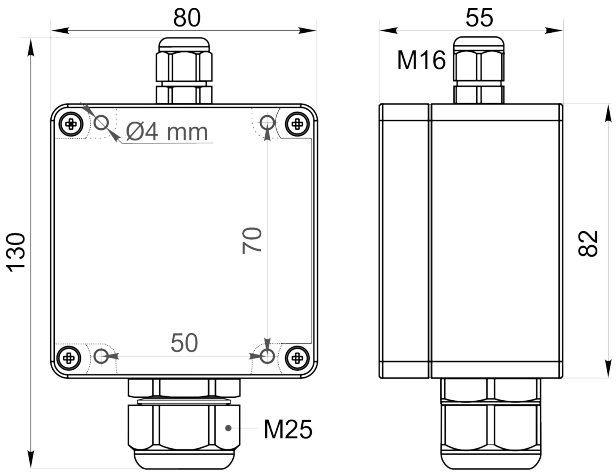

Duct mount version

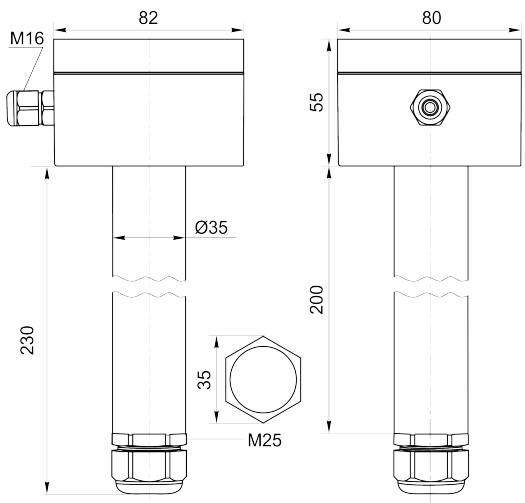

Ask for other versions or custom designed products

Connection diagram

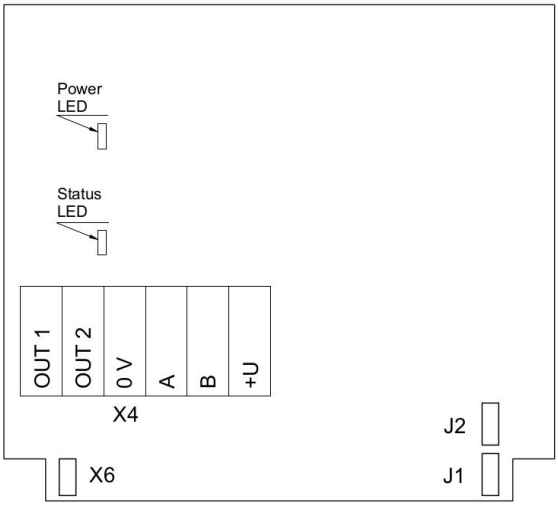

PCB without PSU and relays

Jumpers

J1	OUT1 type (open: 4-20 mA; closed 0-10 V)
J2	OUT2 type (open: 4-20 mA; closed 0-10 V)
X6	Reset Modbus network parameters to default

X4 terminals

OUT1	4-20 mA / 0-10 V output
OUT2	4-20 mA / 0-10 V output
0V	0 V / 24 VAC Neutral (optional)
A	RS485 A / Data +
B	RS485 B / Data -
+U	+24 VDC / 24 VAC Phase (optional)

Remote probe

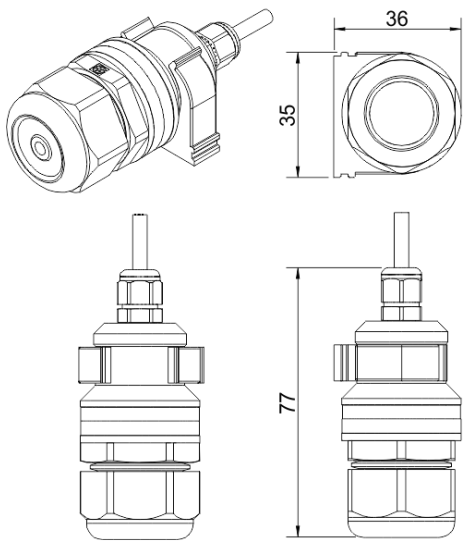

A

Wall mount remote probe with fixing clamp (default version)

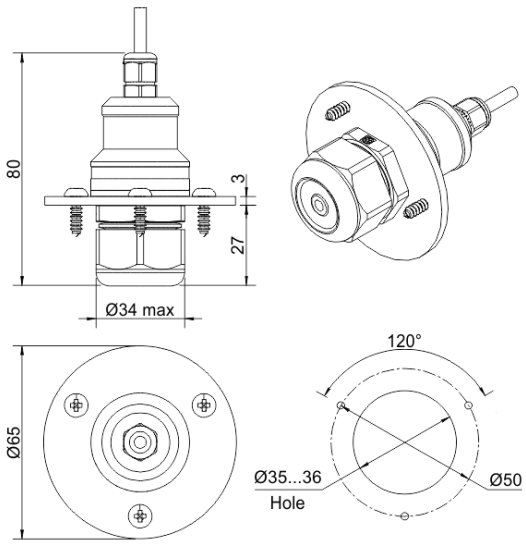

B

Remote probe with rubber flange and three self-tapping screws (on request)